Highway 111 Corridor Study

Tea, SD

June, 2009

LINCOLN CO. HWY 111
CORRIDOR STUDY

Draft Study

Tea, South Dakota

Prepared for

City of Tea
Sioux Falls Metropolitan Planning Organization

Prepared by
HDR Engineering, Inc.

JUNE 2009

TABLE OF CONTENTS

CHAPTER 1: INTRODUCTION.....1

1.1 STUDY PURPOSE 1
1.2 STUDY METHODOLOGY 1

CHAPTER 2: EXISTING CONDITIONS 3

2.1 EXISTING ROADWAY NETWORK 3
LC 111/First Street 3
LC 111/Kevin Drive 3
LC 111/Brian Street.....3
LC 111/27st Street.....3
2.2 EXISTING TRAFFIC VOLUMES 3

CHAPTER 3: TRAFFIC PROJECTIONS 6

3.1 TEA COMPREHENSIVE PLAN.....6
3.2 FUTURE TRAFFIC VOLUMES (2035).....6

CHAPTER 4: OPERATIONAL ANALYSIS.....10

4.1 ANALYSIS DESCRIPTION.....10
4.2 2009 EXISTING CONDITIONS ANALYSIS 11
4.3 2035 CONDITIONS ANALYSIS, *with no improvements*.....11
4.4 2035 CONDITIONS ANALYSIS, *with improvements* 11

CHAPTER 5: FINDINGS AND RECOMMENDATIONS.....12

5.1 GENERAL FINDINGS.....12
5.2 SPECIFIC FINDINGS & RECOMMENDATIONS 12

CHAPTER 6: ACCESS MANAGEMENT.....15

6.1 EXISTING ACCESS POINTS.....15
6.2 LAND OWNERSHIP.....15
6.3 ACCESS CRITERIA.....15
6.4 PHYSICAL CONSTRAINTS.....17
6.5 RECOMMENDED DISPOSITION OF ACCESS POINTS.....17

APPENDIX.....22

LIST OF TABLES

TABLE 1. LEVEL OF SERVICE DESCRIPTION 10
TABLE 2. SOUTH DAKOTA ACCESS CRITERIA…….……16
TABLE 3. ACCESS INVENTORY……...…….18

LIST OF FIGURES

FIGURE 1 STUDY AREA…….....2
FIGURE 2. 2009 LANE GEOMETRY.....4
FIGURE 3. 2009 EXISTING VOLUMES AND LEVEL OF SERVICE 5
FIGURE 4. FUTURE LAND USE.....7
FIGURE 5. 2035 LINK VOLUMES.....8
FIGURE 6. 2035 VOLUMES AND LEVEL OF SERVICE 9
FIGURE 7. 2035 RECOMMENDED LAND GEOMETRY AND INTERSECTION CONTROL.....14
FIGURE 8A. ACCESS LAYOUT...……..……..19
FIGURE 8B. ACCESS LAYOUT……..…….....…….20
FIGURE 8C. ACCESS LAYOUT……..…….....21

CHAPTER 1: INTRODUCTION

1.1 STUDY PURPOSE

Tea, South Dakota, one of the fastest growing cities in the state, is actively planning for the infrastructure necessary to serve its population growth. The portion of Lincoln Co. Highway 111 that traverses the City has evolved into the main commercial corridor; with stores, restaurants, banks, retail services, and light industries lining much of the street. Additional development is also planned within and adjacent to the corridor. These changes have the potential to affect traffic operations on Highway 111. This study will evaluate the potential traffic effects and propose changes to accommodate those effects. The study area is shown in **Figure 1** and includes the following study intersections. Intersections highlighted with a red circle are intersections that may be impacted due to the planned growth:

- LC 111/First Street
- LC 111/Kevin Drive
- LC 111/Brian Street
- LC 111/271st Street

1.2 STUDY METHODOLOGY

The main objective of this study is to determine the traffic impacts within the Highway 111 corridor. A traffic analysis was performed to determine any mitigation measures necessary to maintain adequate traffic flow at each of the study area intersections. In order to determine these impacts, the following tasks were performed:

- 2009 Existing A.M. and P.M. peak hour turning movement counts and a geometric inventory for the study area intersections were gathered by HDR.
- Future traffic volumes (for year 2035) were forecast based on future land uses
- Capacity analyses were performed for three volume scenarios:
    - Existing traffic volumes.
    - Future traffic volumes (year 2035) with existing road system.
    - Future traffic volumes with an improved road system necessary to efficiently serve future traffic needs.
- Mitigation measures were identified to provide acceptable operations at the study area intersections, if possible.
- Existing access points were inventoried and compared to industry-accepted standards for access location and spacing. An access plan was prepared for inclusion in this report.

FIGURE 1 - STUDY AREA MAP

N

CHAPTER 2: EXISTING CONDITIONS

2.1 EXISTING ROADWAY NETWORK

The study area is located in east-central Tea, South Dakota. The primary roadway facilities in the study area are Lincoln County Highway 111, First Street, Kevin Drive, Brian Street and 271st Street. The southern half of the study area is developed and bounded by agricultural property on most of the north half. All existing roadways in the study area are hard surfaced. The existing lane geometry for all study area intersections is shown in **Figure 2**, and a description of each intersection follows:

LC 111/First Street

The intersection of LC 111/First Street is a four-leg intersection with all-way stop-sign control. One lane serves all movements on each of the north, east and south approaches to the intersection, while the west approach contains one left-turn lane and one combination through-right lane.

LC 111/Kevin Drive

The intersection of LC 111/Kevin Drive is a four-leg intersection with stop-sign control on the east and west approaches. The east, west and south approaches have one lane for all movements. The north approach contains one right-turn lane and one combination through-left lane.

LC 111/Brian Street

The intersection of LC 111/Brian Street is a three-leg intersection with stop-sign control on the west approach. The west approach is served by a left-turn lane and a right-turn lane. The south approach is served by one lane for all movements. The north approach is served by a right-turn lane and a through lane.

LC 111/271st Street

The intersection of LC 111/271st Street is a four-leg intersection with signal control. The west and north approaches are each served by one lane. The south approach contains one right-turn lane and one through-left lane. The west approach contains one left-turn lane and one through-right lane.

2.2 EXISTING TRAFFIC VOLUMES

All existing turning movement volumes were collected by HDR. All volumes were collected in May of 2009. The existing A.M. and P.M. peak hour volumes and Level of Service (LOS) are shown in **Figure 3**. The 2009 existing conditions analysis is further discussed in section 4.2.

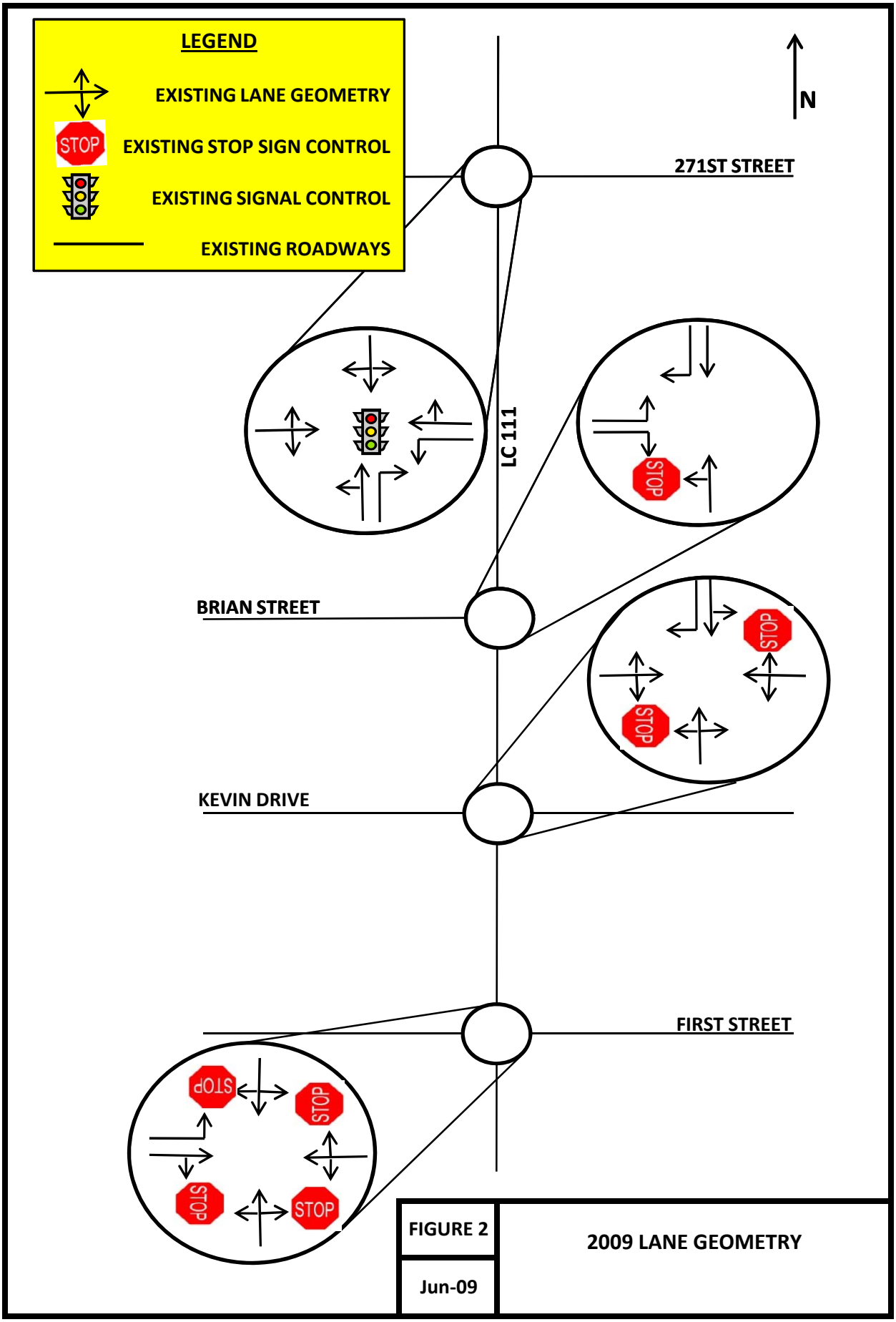

FIGURE 2	2009 LANE GEOMETRY
Jun-09	

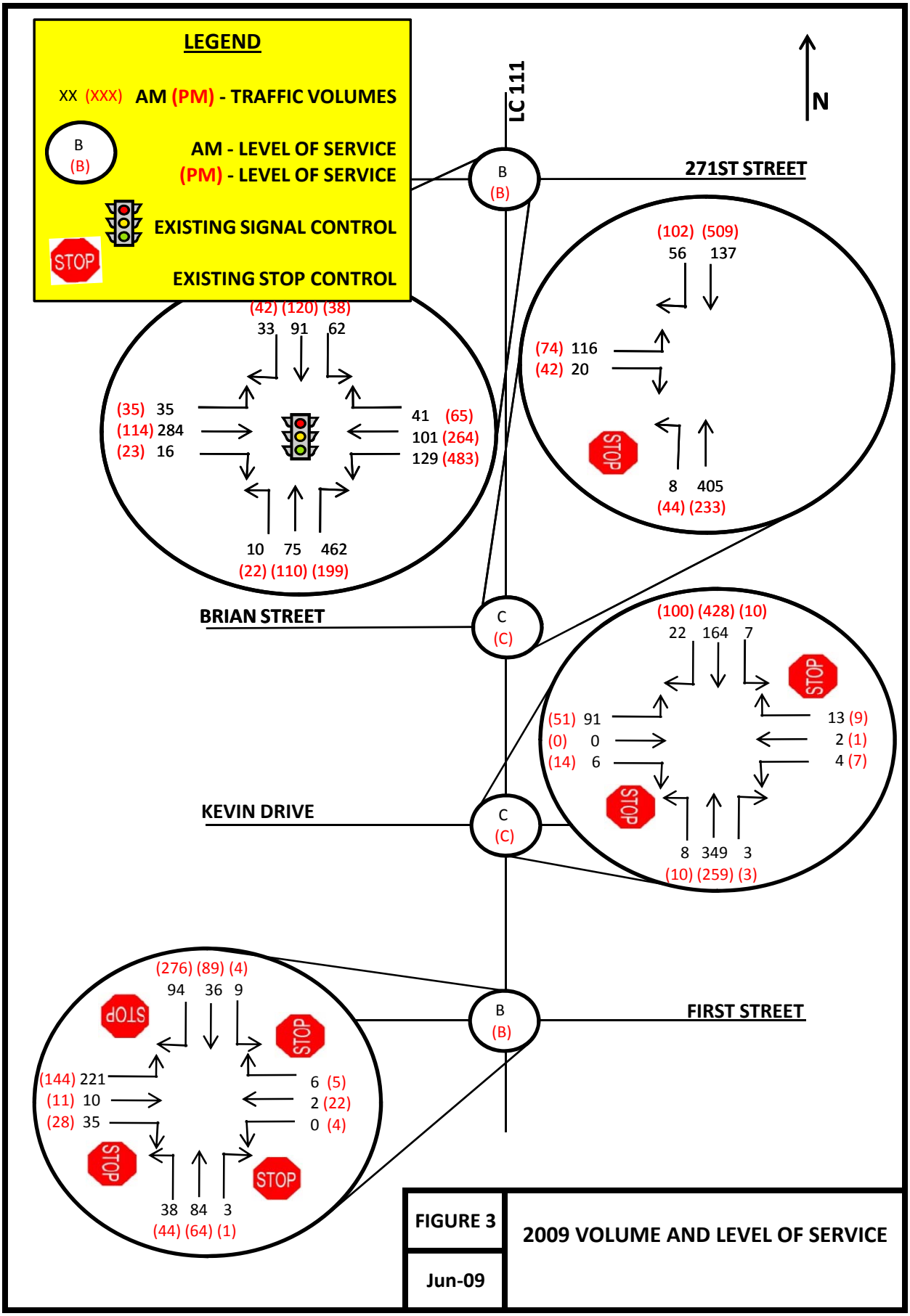

FIGURE 3	2009 VOLUME AND LEVEL OF SERVICE
Jun-09	

CHAPTER 3: TRAFFIC PROJECTIONS

3.1 TEA COMPREHENSIVE PLAN

The future land uses for property that will likely become part of the City of Tea has been planned through the Tea Comprehensive Plan. The future land use is shown in **Figure 4**.

3.2 FUTURE TRAFFIC VOLUMES (2035)

Based on projected growth trends and planned land use in the study area, future year 2035 volumes were developed by HDR using forecast information supplied by the City of Sioux Falls. The City of Sioux Falls planning staff provided output from the regional traffic forecasting model for each scenario. The link volumes for the existing and future base condition are shown in **Figure 5**.

Forecast turning movements and Level of Service for the study area intersections are shown in **Figure 6.** The levels of service shown in Figure 6 are based on the current lane configurations under 2035 traffic conditions. Levels of Service are covered in more detail in Chapter 4.

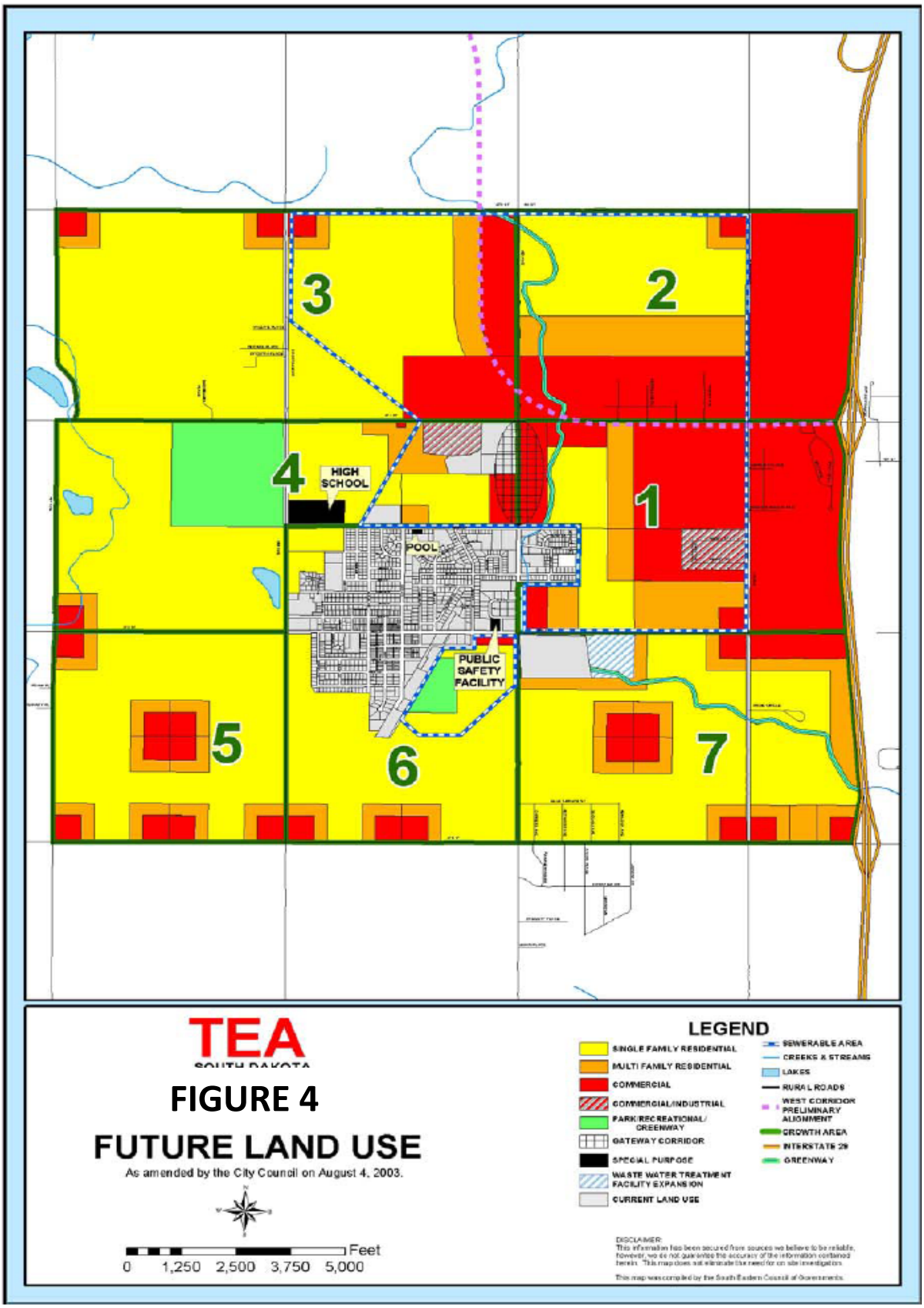

FIGURE 4

FUTURE LAND USE

As amended by the City Council on August 4, 2003.

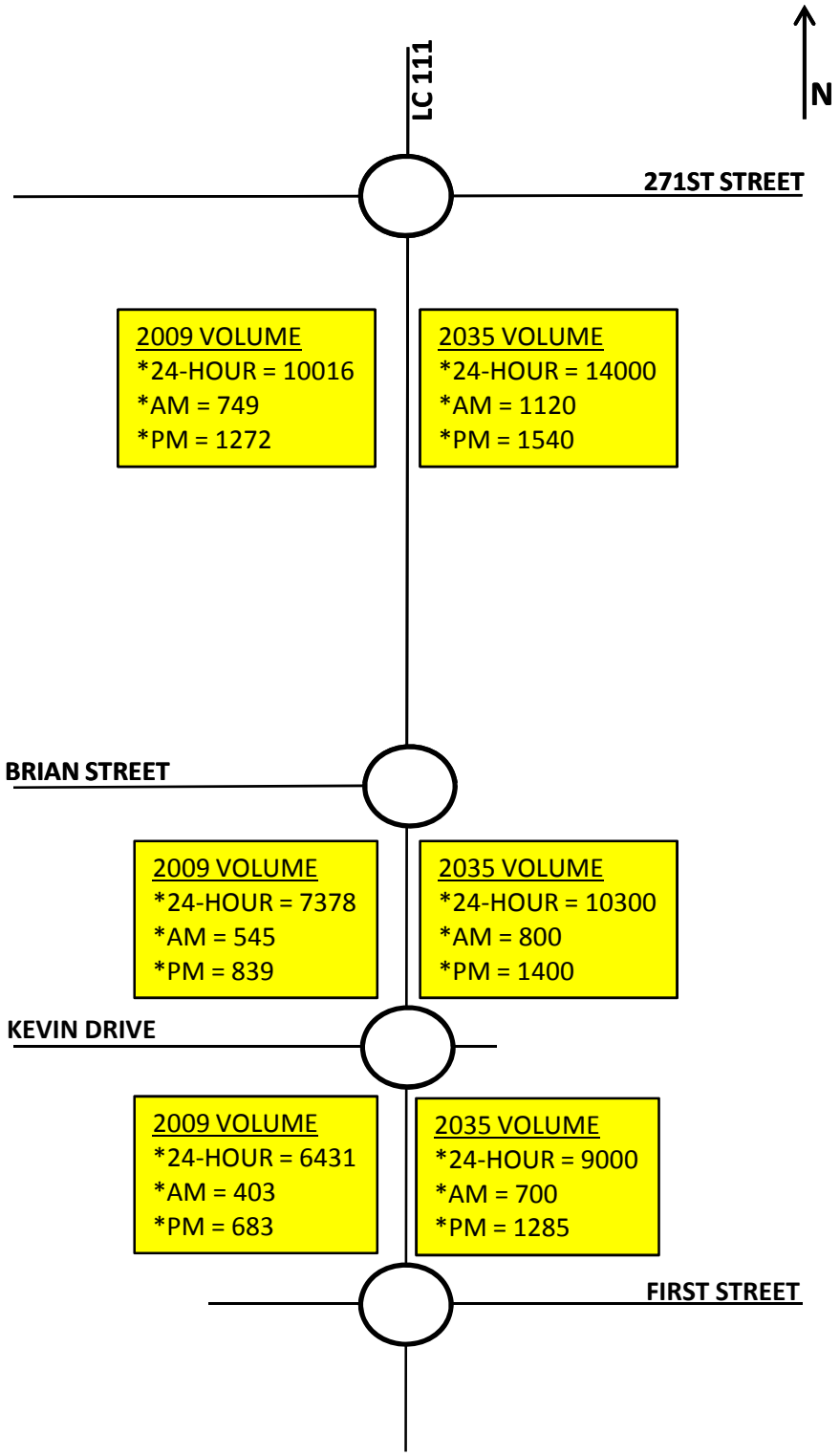

FIGURE 5	2009 AND 2035 LINK VOLUMES
Jun-09	

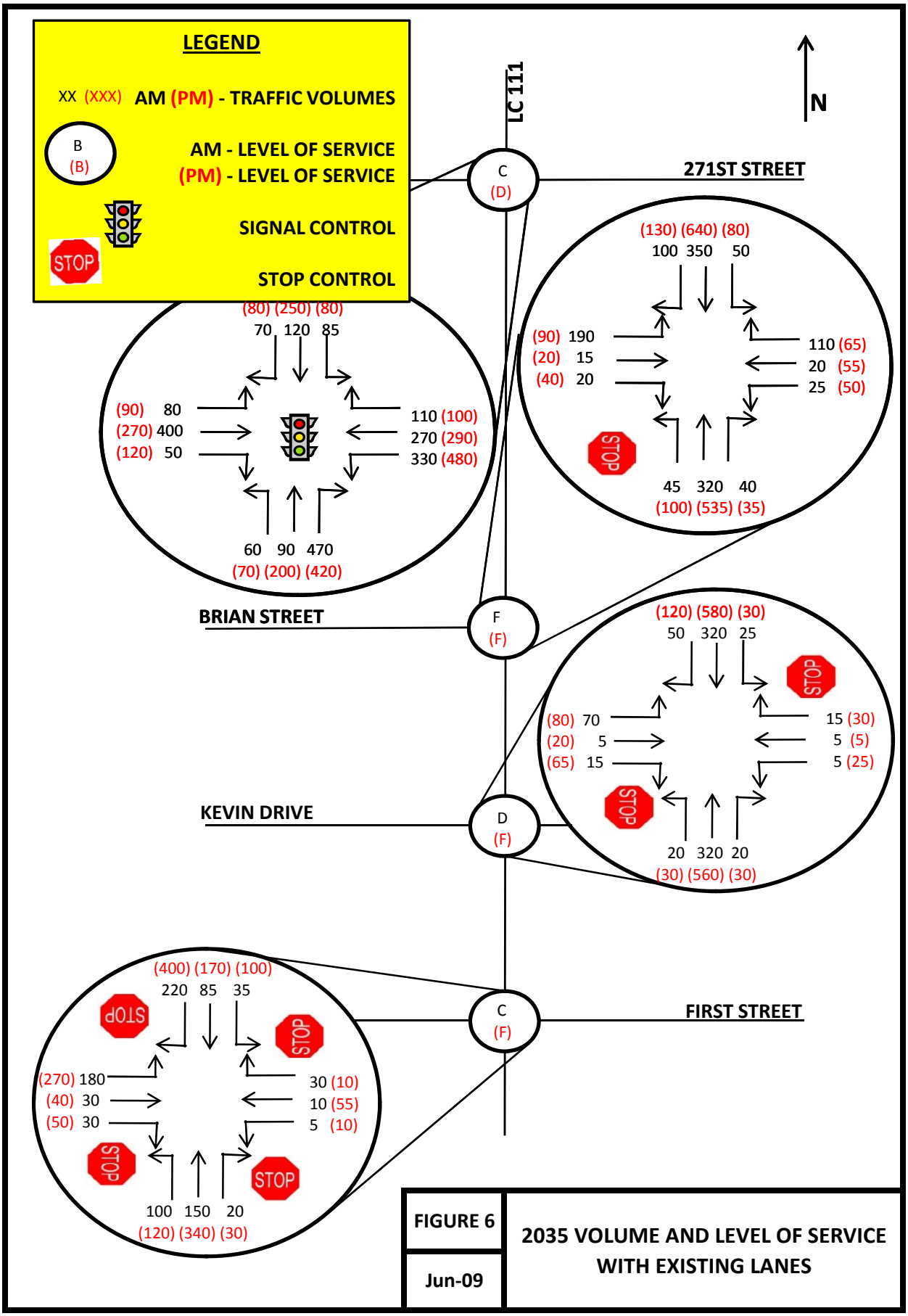

FIGURE 6	2035 VOLUME AND LEVEL OF SERVICE WITH EXISTING LANES
Jun-09	

CHAPTER 4: OPERATIONAL ANALYSIS

4.1 ANALYSIS DESCRIPTION

Observations of traffic volumes provide an understanding of the general nature of traffic, but are insufficient to indicate either the ability of the street network to carry additional traffic or the quality of service provided by the street system. For this reason the concept of *level of service* (LOS) was developed to correlate numerical traffic operational data to subjective descriptions of traffic performance at intersections. Each lane of traffic has delay associated with it and therefore a correlating LOS. The weighted average delay for each of these lanes of traffic for a signalized intersection is the intersection LOS. LOS categories range from LOS "A" (best) to "F" (worst) as shown in Table 2.

TABLE 1. Level of Service Description

Level of Service	SIGNALIZED Intersection Control Delay (sec)	UNSIGNALIZED Intersection Control Delay (sec)	Intersection LOS Description
A	≤ 10.0	≤ 10.0	Free flow, insignificant delays.
B	10.1-20.0	10.1-15.0	Stable operation, minimal delays.
C	20.1-35.0	15.1-25.0	Stable operation, acceptable delays.
D	35.1-55.0	25.1-35.0	Restricted flow, regular delays.
E	55.1-80.0	35.1-50.0	Maximum capacity, extended delays. Volumes at or near capacity. Long queues form upstream from intersection.
F	> 80.0	> 50.0	Forced flow, excessive delays. Represents jammed conditions. Intersection operates below capacity with low volumes. Queues may block upstream intersections.

Source: *Highway Capacity Manual*, Transportation Research Board, 2000

The intersection capacity analyses were completed with Synchro 7.0 software. Synchro replicates the analysis procedures defined in the latest version of the *Highway Capacity Manual*. This manual provides procedures for the analysis of both signalized and unsignalized intersections. It should be noted that stop-controlled intersections are analyzed by identifying the amount of delay at each approach that conflict with other intersection movements (i.e. all movements except the free flow thru lanes), thus approach LOS is reported for unsignalized intersections.

LOS "C" has generally been established as the standard for planning of transportation facilities for peak hour traffic conditions. However, LOS "D" is often accepted in urbanized areas where the cost or impacts to provide LOS "C" is prohibitive. For this study, LOS "D" for the overall intersection was used as the minimum standard.

A review of the analyses for each volume scenario is provided below. Summary LOS output reports of the analyses are included in the Appendix.

4.2 2009 EXISTING CONDITIONS ANALYSIS

A capacity analysis was performed using the existing A.M. and P.M. peak hour traffic volumes on the existing roadway network. The intersection of LC 111/First Street operates at LOS "B" during both peak hours. The intersection of LC 111/Kevin Drive operates at LOS "C" during both peak hours. The intersection of LC 111/Brian Street operates at LOS "C" during both peak hours. The intersection of LC 111/271st Street operates at LOS "B" during both peak hours. The existing peak hour traffic volumes, pedestrian volumes, and levels of service are shown in **Figure 3**.

4.3 2035 CONDITIONS ANALYSIS, *with no improvements*

A capacity analysis was performed for the 2035 traffic volumes on the roadway network without any additional roadway improvements. The intersection of LC 111/First Street operates at LOS "C" in the AM peak hour and LOS "F" in the PM peak hour. The intersection of LC 111/Kevin Drive operates at LOS "D" in the AM peak hour and LOS "F" in the PM peak hour. The intersection of LC 111/Brian Street operates at LOS "F" in both peak periods. The intersection of LC 111/271st Street operates at LOS "C" in the AM peak and LOS "D" in the PM peak. All study area arterial intersections appear to need improvement to avoid future congestion problems. The 2035 volumes and levels of service are shown in **Figure 6**.

4.4 2035 CONDITIONS ANALYSIS, *with improvements*

Capacity analyses were performed using the year 2035 traffic volumes for a network including various lane additions and intersection controls, with the goal of achieving acceptable levels of service. Those analyses were used to prepare the recommended improvements described in Chapter 5. The 2035 recommended improvements are shown in **Figure 7**.

CHAPTER 5: FINDINGS AND RECOMMENDATIONS

This section summarizes the findings and recommendations based upon analysis of future development and traffic conditions.

5.1 GENERAL FINDINGS

The general findings and recommendations are as follows:

- **Under the 2009 existing volume scenario** all the intersections in the study area operate well during both the A.M. and P.M. peak hours.
- **Under the 2035 volume scenarios, *without improvements,*** all study area intersections appear to need additional lanes or traffic control to operate at acceptable levels.
- **The 2035 link volumes** have reached a level that will likely require two through lanes in each direction. The density of development along the corridor and access spacing appears to call for a continuous left-turn lane, resulting in a future 5-lane roadway cross-section. A 4-lane divided cross-section may also be appropriate for portions of the corridor that have remained mostly undeveloped.
- **Traffic control** at the study area intersections will need to transition to traffic signal control, with the most likely candidates for signal control being LC 111/First Street and LC 111/Brian Street. Traffic conditions should be monitored and plans should be made for signalization when the intersections meet the traffic signal warrant conditions, as described in the Manual on Uniform Traffic Control Devices (MUTCD).
- **Demand for pedestrian and bicycle service** in the corridor is growing due to traveler desire to reach the businesses along the corridor. Federal regulations require that pedestrians and bicyclists be accommodated on all routes that receive Federal funding.

5.2 SPECIFIC FINDINGS & RECOMMENDATIONS

The recommendations to mitigate each intersection to LOS "C" or better in 2035 are listed below. Refer to **Figure 7** for a graphic illustration, including needed lane layouts.

- **LC 111/First Street** – provide additional lanes and underground infrastructure for a future traffic signal.
- **LC 111/Kevin Drive** – provide additional lanes and underground infrastructure for a future traffic signal.
- **LC 111/Brian Street** – provide additional lanes and underground infrastructure for a future traffic signal.
- **LC 111/271st Street** – provide additional lanes and a permanent traffic signal installation with mast arms and provisions for coordination throughout the corridor.

Provisions should be made for pedestrians and bicyclists in the design of improvements on LC 111, within the City of Tea. Options include sidewalks along both sides of the street, widened pedestrian and bicycle side-paths instead of sidewalks, and a combination of sidewalks and on-street bicycle lanes. The City of Brandon recently installed side-paths during reconstruction of Holly Boulevard. Those side-paths appear to be well-accepted by the community. Other similar installations in other states have resulted in safety problems at street intersections. Experienced bicyclists tend to shun side-paths in favor of riding

on the street and prefer bicycle lanes. The type of pedestrian and bicycle improvements designed for LC 111 in Tea should be the subject of community discussion prior to implementation.

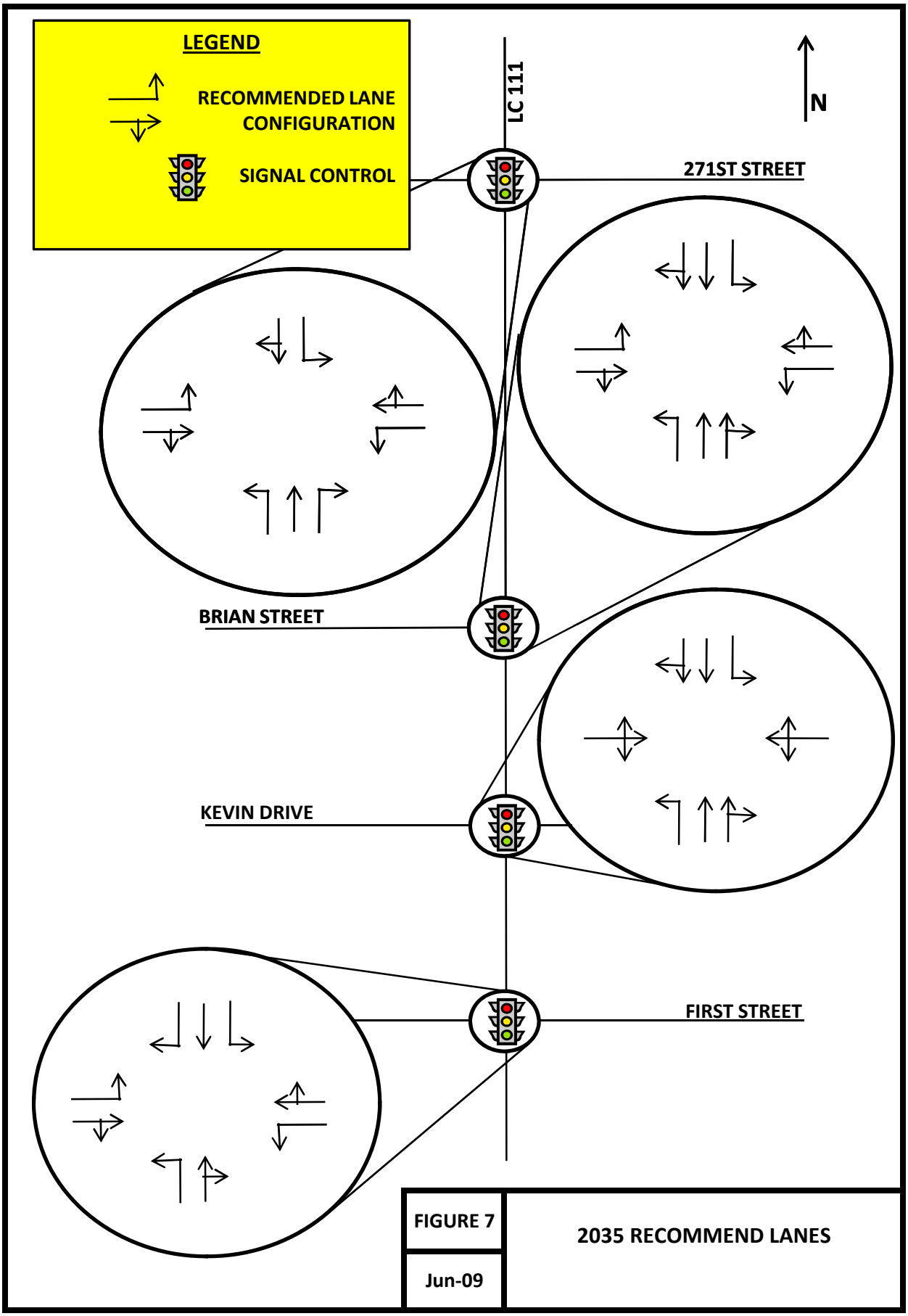

FIGURE 7	2035 RECOMMEND LANES
Jun-09	